Split Core Hall Effect DC Current Sensor CYHCT-KF2V

This Hall Effect current sensor is based on open loop principle and designed with a high galvanic isolation between primary conductor and secondary circuit. It can be used for measurement of DC current, DC pulse currents etc. The output of the transducer reflects the real wave of the current carrying conductor.

Product Characteristics	Applications
• Excellent accuracy • Very good linearity • Using split cores and easy mounting • Less power consumption • Window structure with split core • Electrically isolating the output of the transducer from the current carrying conductor • No insertion loss • Current overload capability	• **Photovoltaic equipment** • Frequency conversion timing equipment • Various power supply • Uninterruptible power supplies (UPS) • Electric welding machines • Transformer substation • Numerical controlled machine tools • Electric powered locomotive • Microcomputer monitoring • Electric power network monitoring

Electrical Data

Primary Nominal DC Current I_r (A)	Measuring Range (A)	DC Output Voltage (V)	Window Size (mm)	Part number (see application notes on page 3)
300	0~±300	x=0: 0-4V ±1.0% x=3: 0-5V ±1.0% x=8: 0-10V ±1.0%	85 x 27	CYHCT-KF2V-U/B300A-xn
500	0~±500			CYHCT-KF2V-U/B500A-xn
600	0~±600			CYHCT-KF2V-U/B600A-xn
800	0~±800			CYHCT-KF2V-U/B800A-xn
1000	0~±1000			CYHCT-KF2V-U/B1000A-xn
1500	0~±1500			CYHCT-KF2V-U/B1500A-xn
2000	0~±2000			CYHCT-KF2V-U/B2000A-xn
3000	0~±3000			CYHCT-KF2V-U/B3000A-xn

(n=2, *Vcc*= +12VDC; n=3, *Vcc* =+15VDC; n=4, *Vcc* =+24VDC, U: unidirectional input current; B: bidirectional input current, please give U or B in Part number)

Supply Voltage	V_{cc}= +12V, +15V, +24VDC ± 5%
Output Voltage at I_r, T_A=25°C:	V_{out} =0- 4V, 0-5V, 0-10VDC
Current Consumption	I_c < 25mA
Galvanic isolation, 50/60Hz, 1min:	3kV rms
Output Impedance:	R_{out} < 150Ω
Load resistance:	10kΩ

Accuracy and Dynamic performance data

Accuracy at I_r, T_A=25°C,	X <±1.0% FS
Linearity from 0 to I_r, T_A=25°C,	E_L <±0.5% FS
Electric Offset Voltage, T_A=25°C,	V_{oe} <50mV
Magnetic Offset Voltage (I_r →0)	V_{om} <±20mV
Thermal Drift of Offset Voltage,	V_{ot} <±1.0mV/°C
Response Time at 90% of I_P (*f*=1k Hz)	t_r < 1ms
Frequency Bandwidth (-3dB),	f_b = DC - 20 kHz
Case Material:	PBT

Markt Schwabener Str. 8
D-85464 Finsing
Germany

Tel.: +49 (0)8121 – 2574100
Fax: +49 (0)8121– 2574101
Email: info@cy-sensors.com
http://www.cy-sensors.com

General Data

Ambient Operating Temperature,	T_A = -25°C ~ +85°C
Ambient Storage Temperature,	T_S =-40°C ~ +100°C

Dimensions

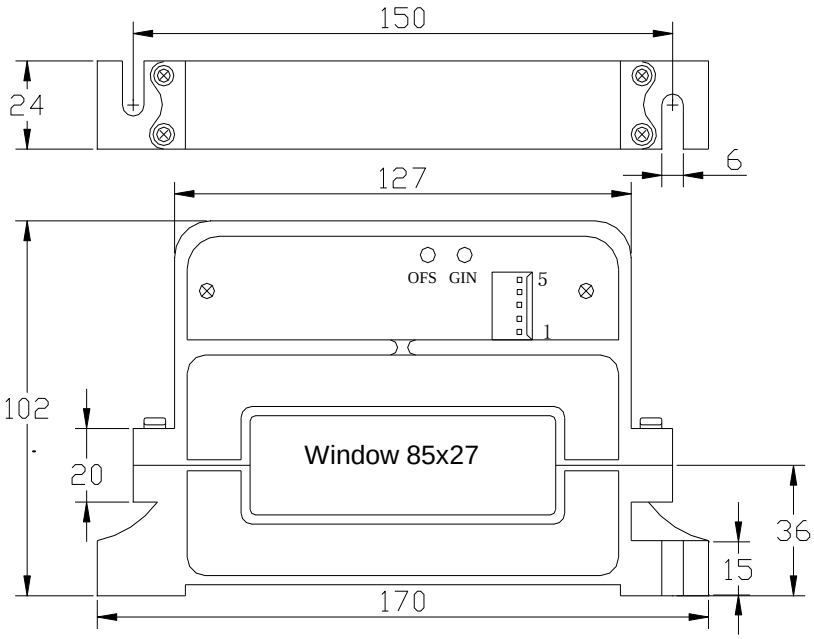

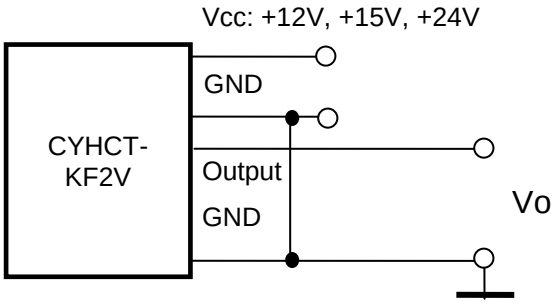

Pin Arrangement

1: Vcc
2: Ground (GND)
3: Output
4: NC
5: NC

GIN: gain adjustment
OFS: offset adjustment

Notes:

1. Connect the terminals of power source, output respectively and correctly, never make wrong connection.
2. Two potentiometers can be adjusted, only if necessary, by turning slowly to the required accuracy with a small screwdriver.
3. The best accuracy can be achieved when the window is fully filled with bus-bar (current carrying conductor).
4. The in-phase output can be obtained when the direction of current of current carrying conductor is the same as the direction of arrow marked on the transducer

Markt Schwabener Str. 8
D-85464 Finsing
Germany

Tel.: +49 (0)8121 – 2574100
Fax: +49 (0)8121– 2574101
Email: info@cy-sensors.com
http://www.cy-sensors.com

Application Notes

1) Part number CYHCT-KF2V-U/BxxxxA-xn

U: unidirectional input current; **B:** bidirectional input current; **xxxx:** current value; **x:** output voltage (**x**=0: 0-4V ±1.0%; **x**=3: 0-5V ±1.0%; **x**=8: 0-10V ±1.0%); **n:** power supply (**n**=2, *Vcc*= +12VDC; **n**=3, *Vcc* =+15VDC; **n**=4, *Vcc* =+24VDC)

Example 1: CYHCT-KF2V-U1000A-32 Hall Effect DC Current sensor with
Output signal: 0 – 5V DC
Power supply: +12V DC
Rated input current: 0 - 1000A DC (unidirectional)

Example 2: CYHCT-KF2V-B1000A-84 Hall Effect DC Current sensor with
Output signal: 0 – 10V DC
Power supply: +24V DC
Rated input current: -1000A - 0 - +1000A DC (bidirectional)

.

2) Relation between Input current and output signal

Current Sensor CYHCT-KF2V-U1000A-32	
Input current (A)	Output voltage Vo (V)
0	0
250	1.25
500	2.5
750	3.75
1000	5

Current Sensor CYHCT-KF2V-B1000A-84	
Input current (A)	Output voltage Vo (V)
-1000	0
-750	1.25
-500	2.5
-250	3.75
0	5
250	6.25
500	7.5
750	8.75
1000	10